PC DOOR & COMPONENTS

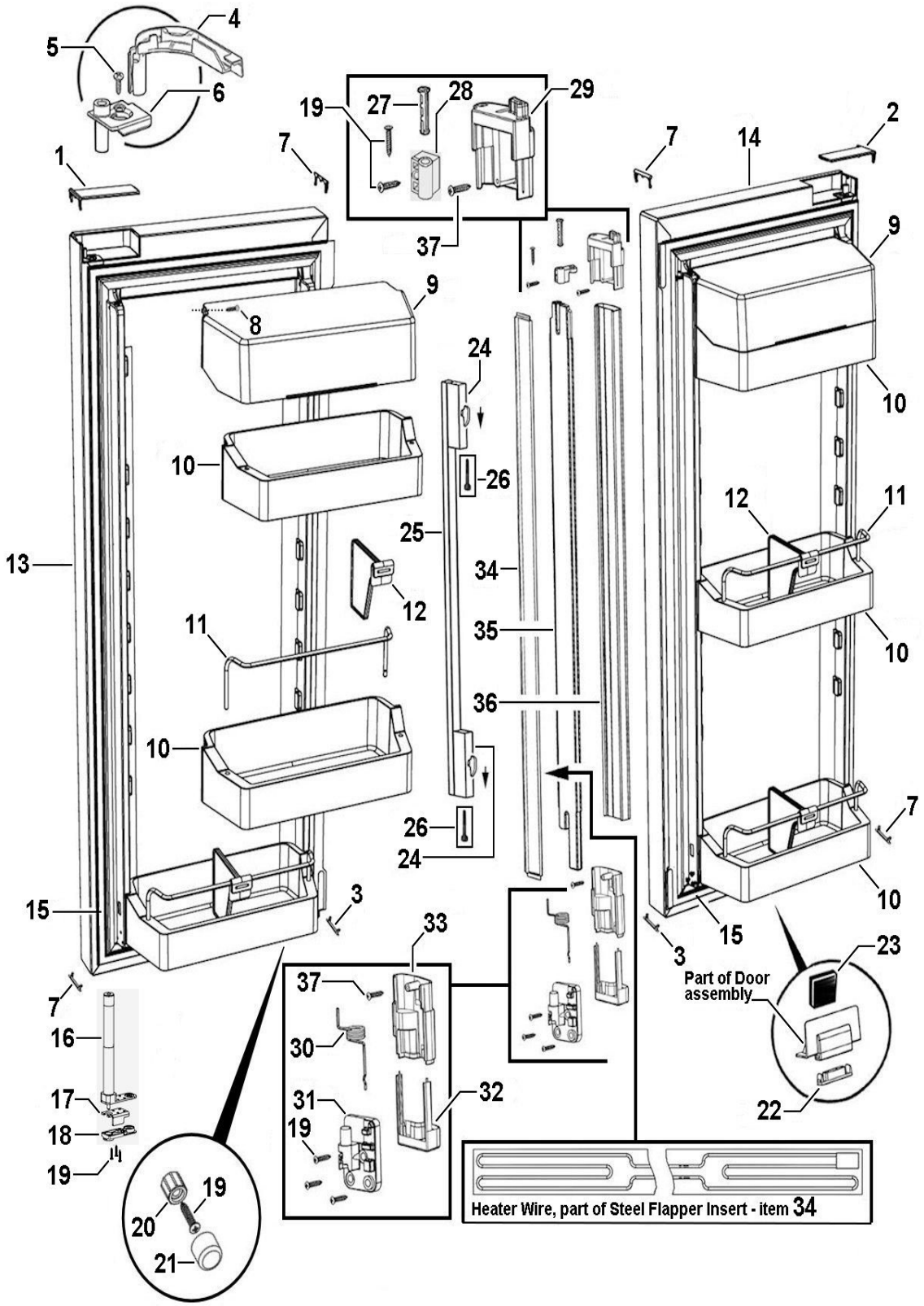

DWG003022 APRIL 2013

WATER DISPENSER HOUSING & DISPLAY MODULE

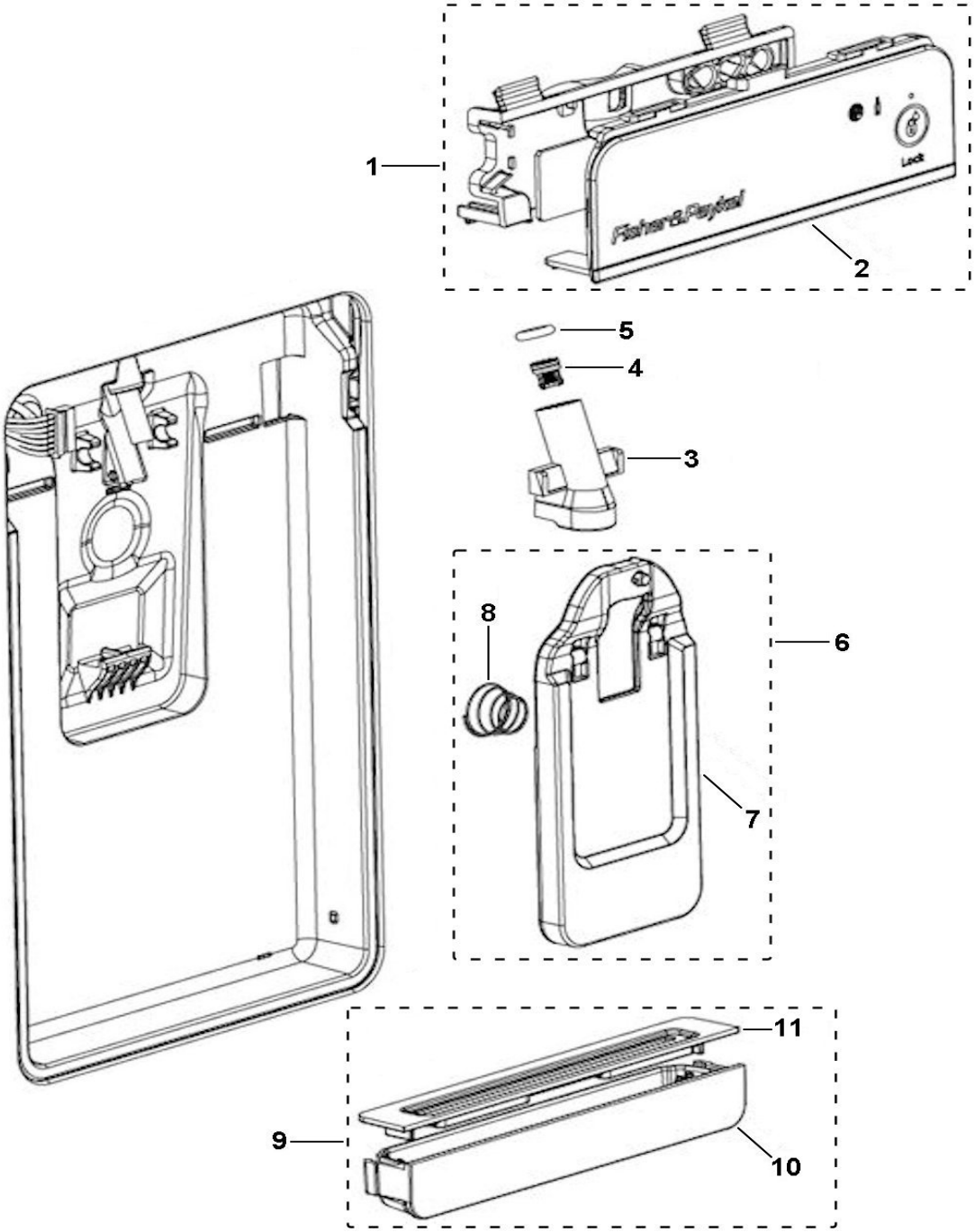

DWG002946 MARCH 2013

DRAWER FC ASSEMBLY & FITTINGS

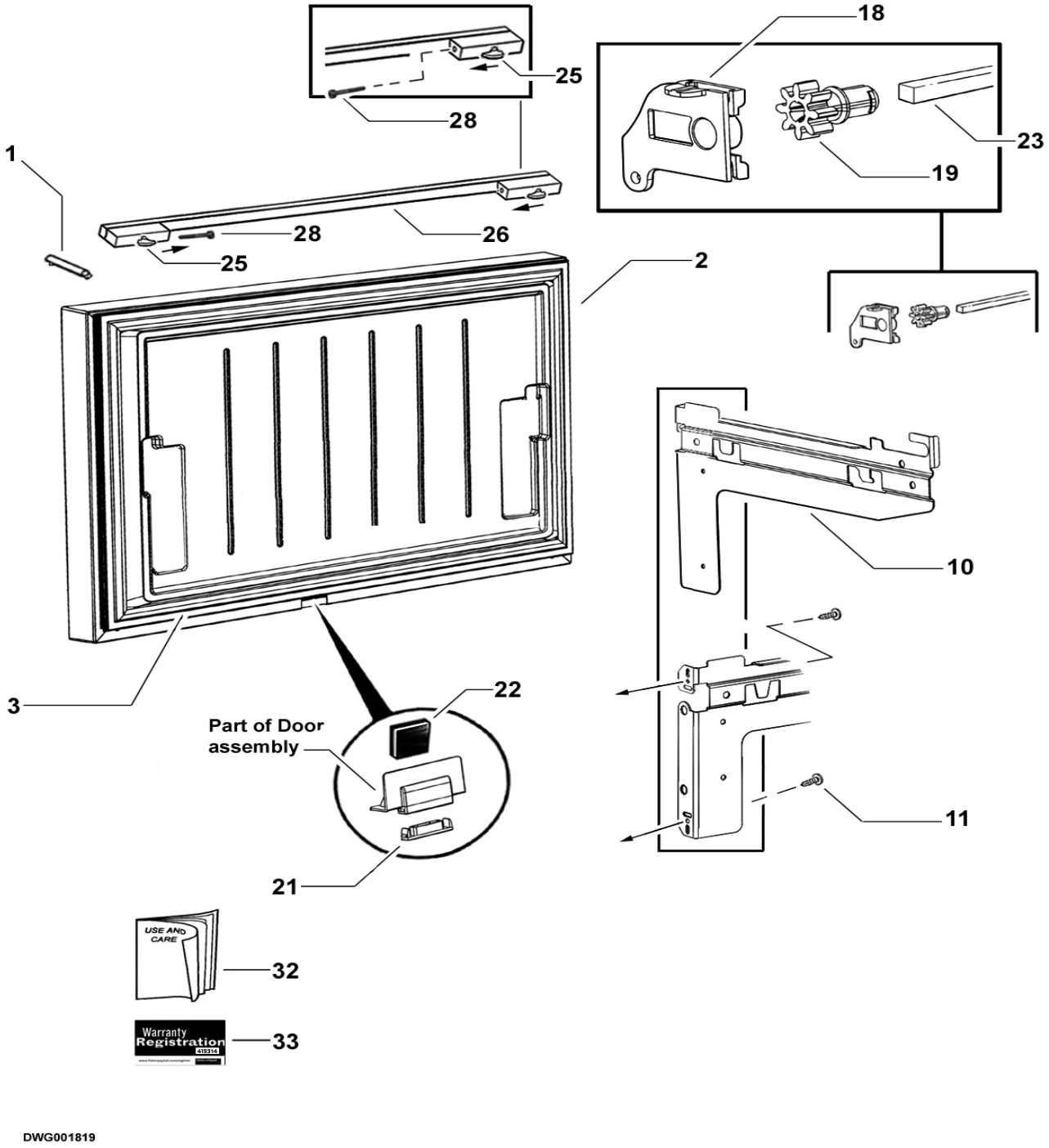

CABINET INTERIOR & EXTERIOR FITTINGS

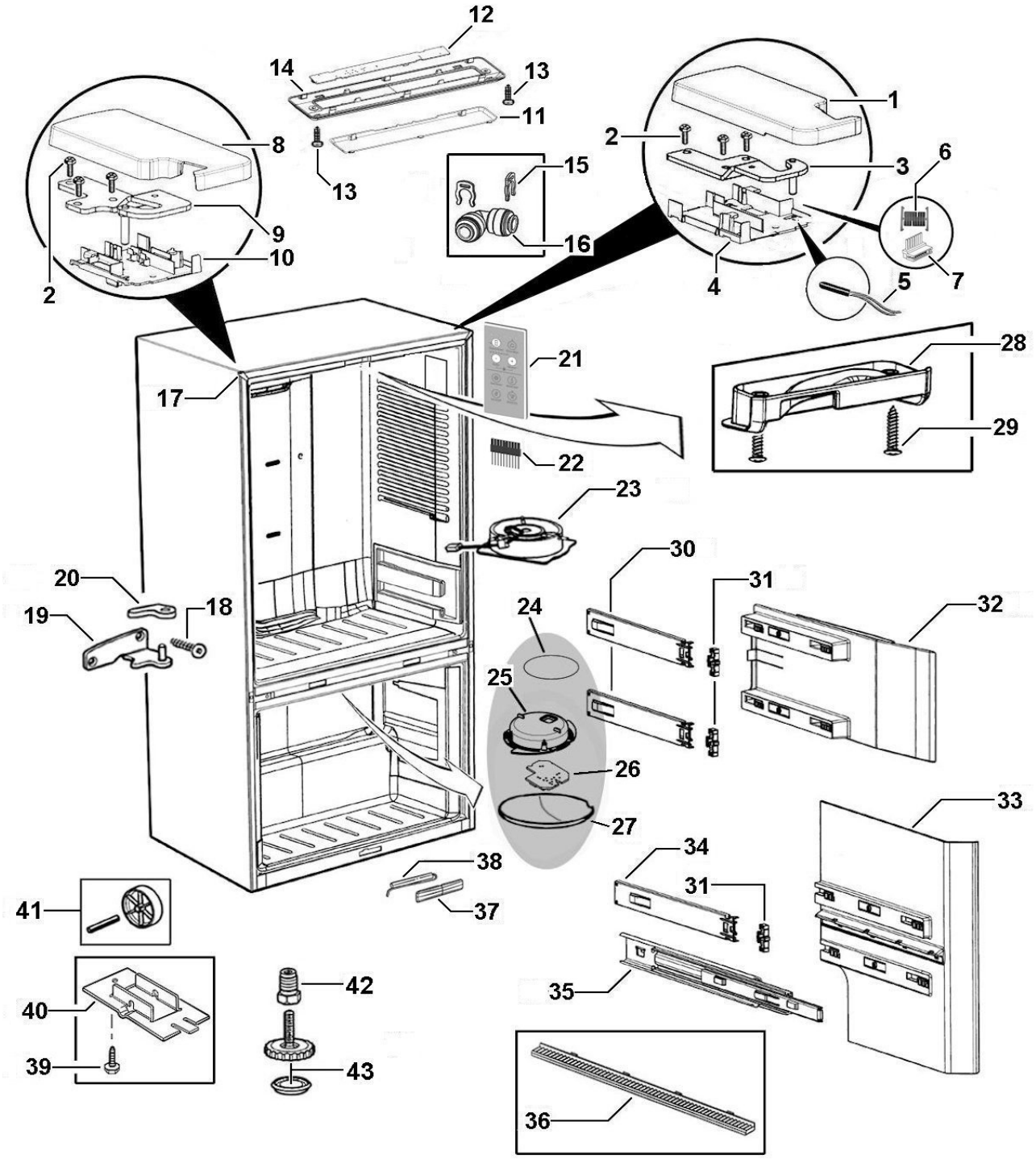

DWG002930 FEBRUARY 2013

CABINET INTERIOR COMPONENTS

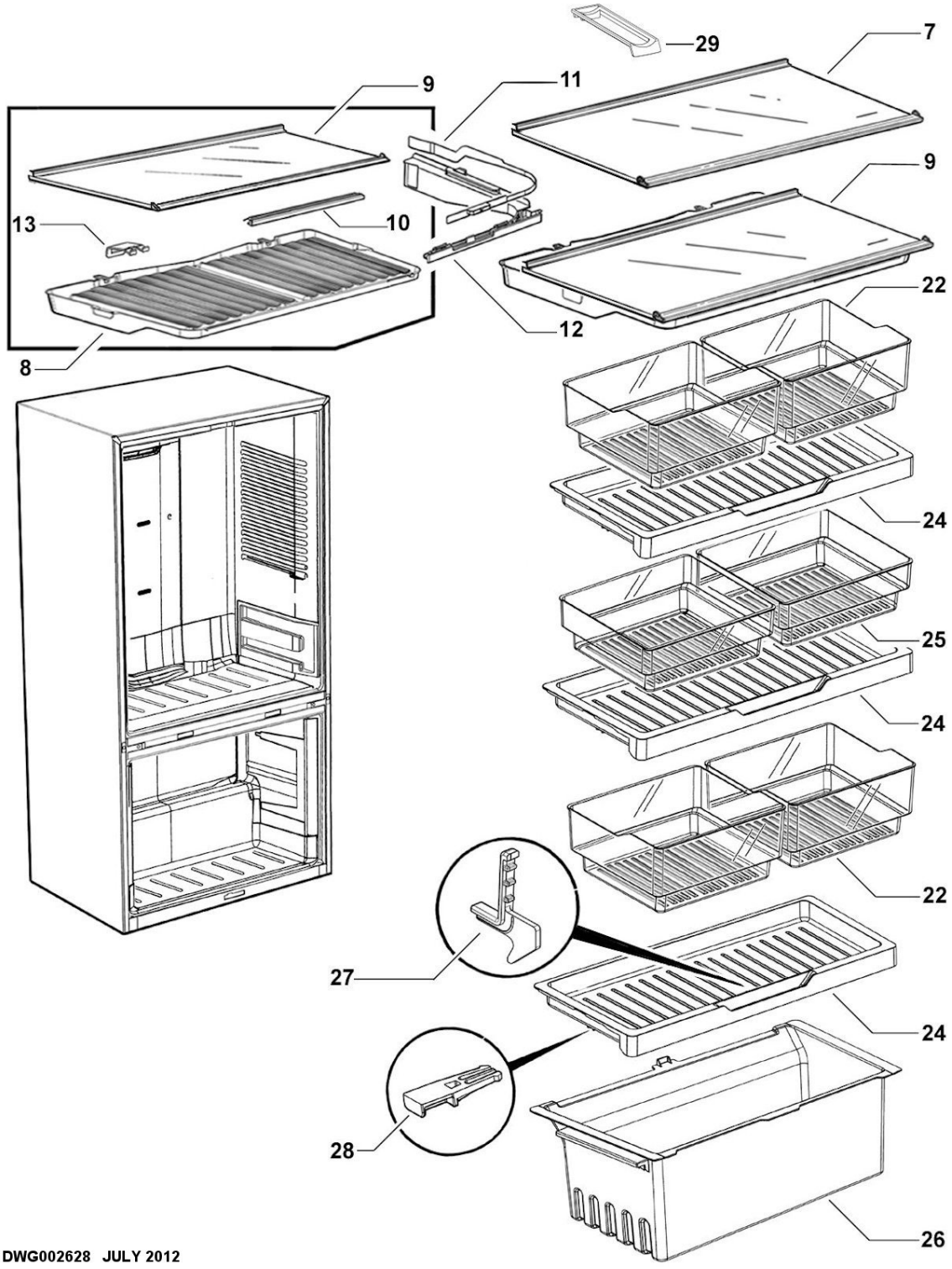

ICE MAKER COMPONENTS & ICE BIN

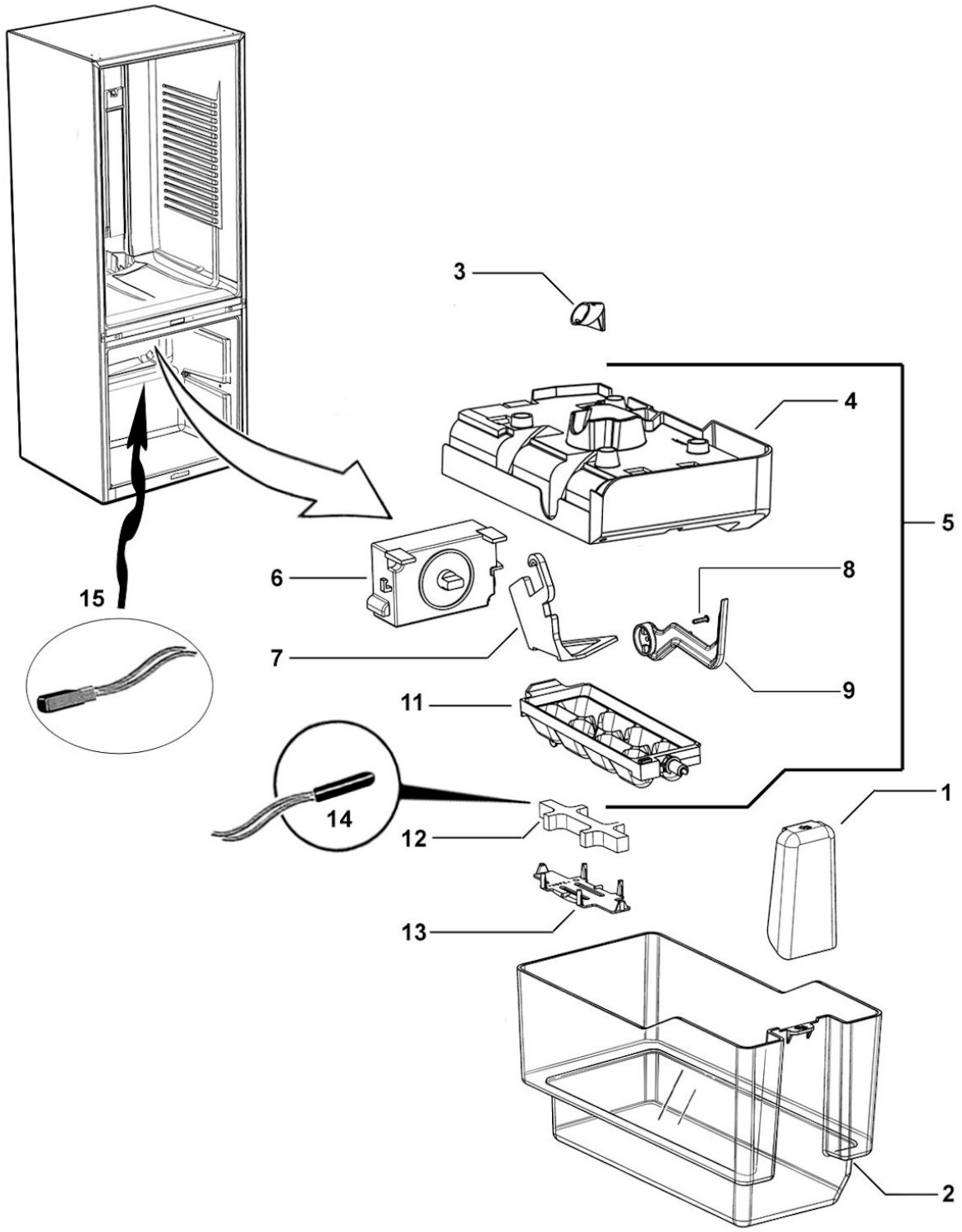

DWG002685 JULY 2012

FAN, COVERS & EVAPORATOR ASSEMBLIES

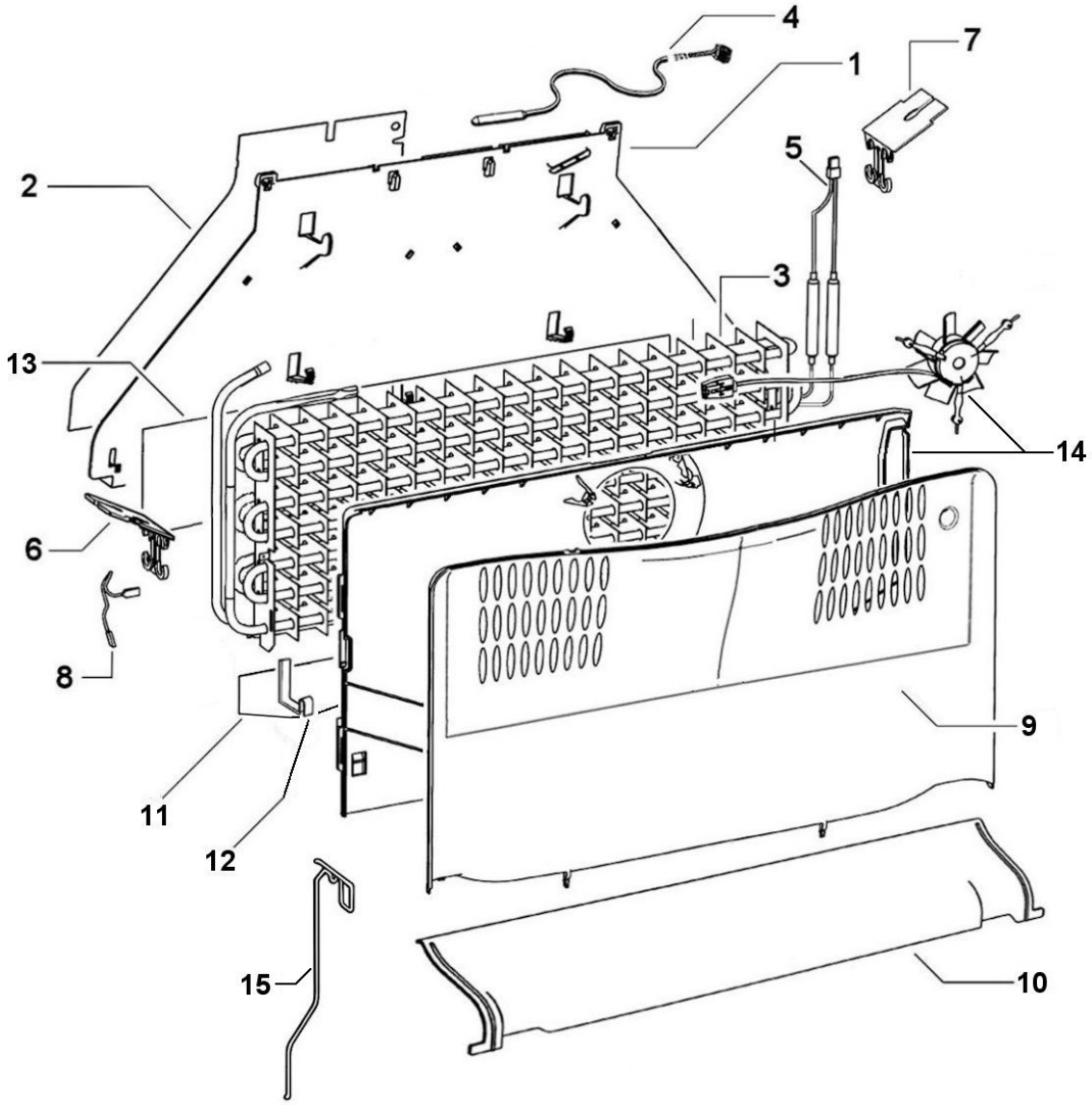

DWG002714 APRIL 2012

WATER TANK & DUCT COVERS

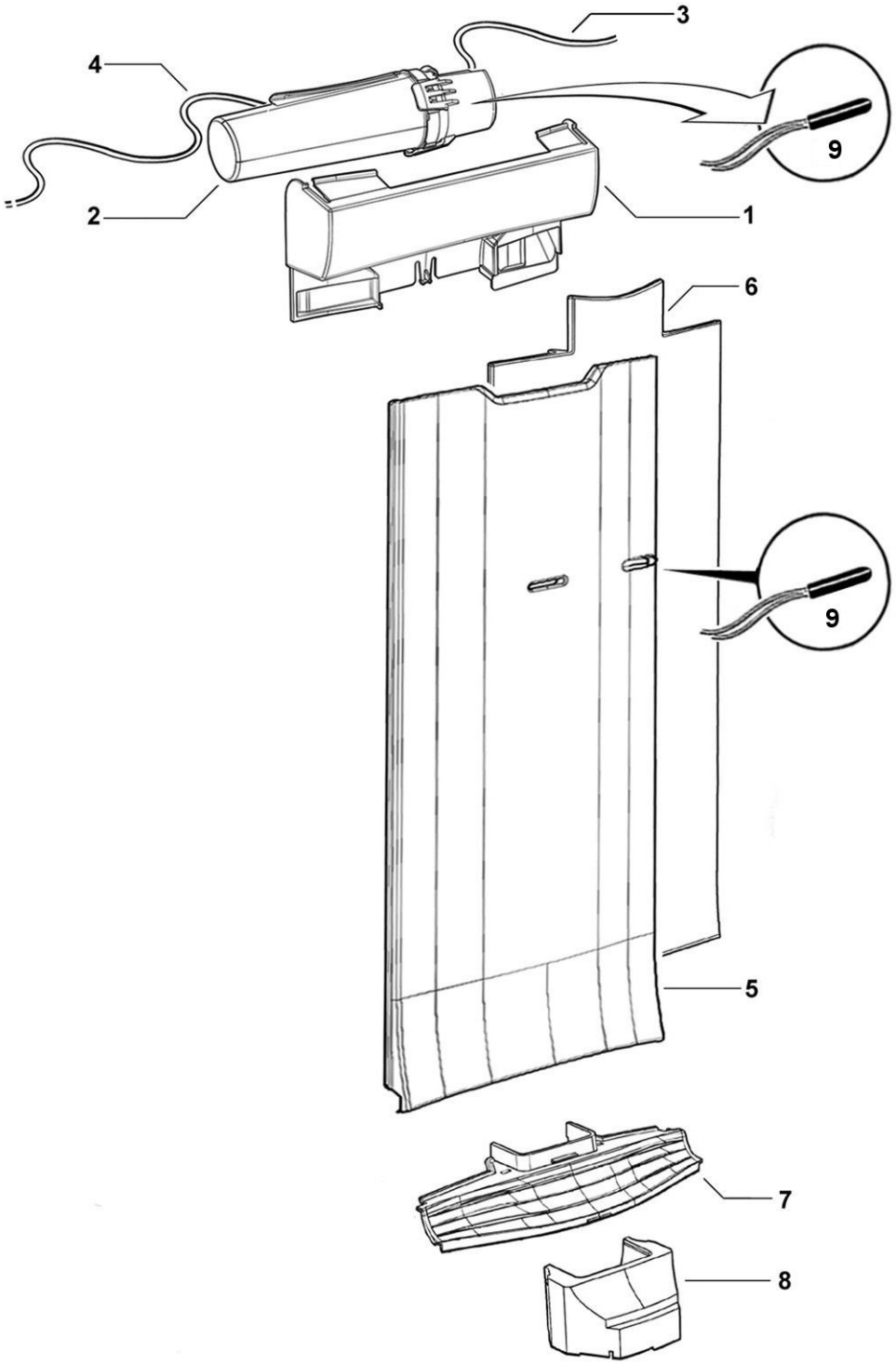

DWG002822 AUGUST 2012

COMPRESSOR, ANCILLARY COMPONENTS & CONTROL MODULE

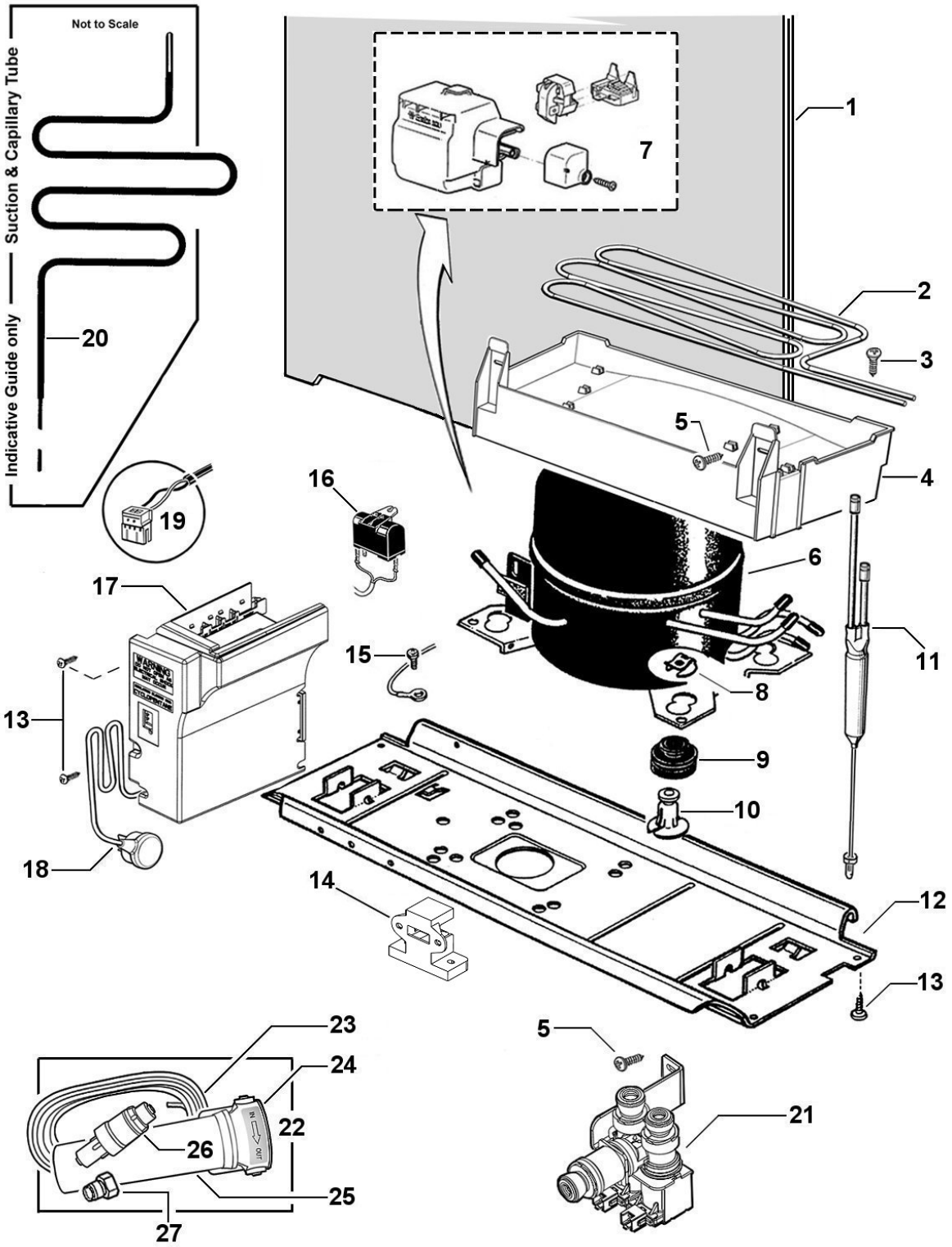

DWG002823 AUGUST 2012